Powerwall 3

Power Everything

—

Powerwall 3 is a fully integrated solar and battery system, designed to accelerate the transition to sustainable energy. Customers can receive whole home backup, cost savings, and energy independence by producing and consuming their own energy while participating in grid services. Once installed, customers can manage their system using the Tesla App to customize system behavior to meet their energy goals.

Powerwall 3 achieves this by supporting up to 20 kW DC of solar and providing up to 11.5 kW AC of continuous power per unit. It has the ability to start heavy loads rated up to 185 LRA, meaning a single unit can support the power needs of most homes. Powerwall 3 Expansions make it easier and more affordable to scale up customers' systems to meet their current or future needs. Powerwall 3 is designed for fast and efficient installations, modular system expansion, and simple connection to any electrical service.

2024

Powerwall 3 Technical Specifications

System Technical Specifications

Model Number	1707000-xx-y			
Nominal Grid Voltage (Input & Output)	120/240 VAC			
Grid Type	Split phase			
Frequency	60 Hz			
Nominal Battery Energy	13.5 kWh AC[1]			
Nominal Output Power (AC)	5.8 kW	7.6 kW	10 kW	11.5 kW
Maximum Apparent Power	5,800 VA	7,600 VA	10,000 VA	11,500 VA
Maximum Continuous Current	24 A	31.7 A	41.7 A	48 A
Overcurrent Protection Device[2]	30 A	40 A	60 A	60 A
Configurable Maximum Continuous Discharge Power Off-Grid (PV Only, -20°C to 25°C)	15.4 kW[3]			
Maximum Continuous Charge Current / Power (Powerwall 3 only)	20.8 A AC / 5 kW			
Maximum Continuous Charge Current / Power (Powerwall 3 with up to (3) Expansion units)	33.3 A AC / 8 kW			
Output Power Factor Rating	0 - 1 (Grid Code configurable)			
Maximum Output Fault Current (1 s)	160 A			
Maximum Short-Circuit Current Rating	10 kA			
Load Start Capability	185 LRA			
Solar to Battery to Home/Grid Efficiency	89%[1,4]			
Solar to Home/Grid Efficiency	97.5%[5]			
Power Scalability	Up to 4 Powerwall 3 units supported			
Energy Scalability	Up to 3 Expansion units (for a maximum total of 7 units)			
Supported Islanding Devices	Gateway 3, Backup Switch, Backup Gateway 2			
Connectivity	Wi-Fi (2.4 and 5 GHz), Ethernet, Cellular (LTE/4G[6])			
Hardware Interface	Dry contact relay, Rapid Shutdown (RSD) certified switch and 2-pin connector, RS-485 for meters			
AC Metering	Revenue Grade (+/- 0.5%, ANSI C12.20)			
Protections	Integrated arc fault circuit interrupter (AFCI), Isolation Monitor Interrupter (IMI), PV Rapid Shutdown (RSD) using Tesla Mid-Circuit Interrupters			
Customer Interface	Tesla Mobile App			
Warranty	10 years			

[1] Values provided for 25°C (77°F), at beginning of life. 3.3 kW charge/discharge power.

[2] See Powerwall 3 Installation Manual for fuse requirements if using fuse for overcurrent protection.

[3] 15.4kW off-grid maximum continuous discharge power is only available if on-grid rating is 11.5 kW. If enabled, Powerwall 3 must be installed with an 80 A breaker and appropriately sized conductors.

[4] Typical solar shifting use case.

[5] Tested using CEC weighted efficiency methodology.

[6] The customer is expected to provide internet connectivity for Powerwall 3; cellular should not be used as the primary mode of connectivity. Cellular connectivity subject to network operator service coverage and signal strength.

Powerwall 3 Technical Specifications

Solar Technical Specifications

Maximum Solar STC Input	20 kW
Withstand Voltage	600 V DC
PV DC Input Voltage Range	60 — 550 V DC
PV DC MPPT Voltage Range	60 — 480 V DC
MPPTs	6
Maximum Current per MPPT (I_{mp})	15 A [7, 8]
Maximum Short Circuit Current per MPPT (I_{sc})	19 A [8]

[7] Only applicable to Powerwall 3 units with 15 A I_{MP} on the product label. Otherwise, Powerwall 3 has an I_{MP} of 13 A.

[8] When PV strings are combined on the roof and the DC input current exceeds the MPPT rating, a jumper can be used to combine two MPPTs into a single input to intake DC current up to 30 A I_{MP} / 38 A I_{SC} (or 26 A I_{MP} / 30 A I_{SC} if Powerwall 3 is labeled with 13 A I_{MP} / 15 A I_{SC}).

Environmental Specifications

Operating Temperature	–20°C to 50°C (–4°F to 122°F) [9]
Operating Humidity (RH)	Up to 100%, condensing
Storage Temperature	–20°C to 30°C (–4°F to 86°F), up to 95% RH, non-condensing, State of Energy (SOE): 25% initial
Maximum Elevation	3000 m (9843 ft)
Environment	Indoor and outdoor rated
Enclosure Rating	NEMA 3R
Ingress Rating	IP67 (Battery & Power Electronics) IP55 (Wiring Compartment)
Pollution Rating	PD3
Operating Noise @ 1 m	< 50 db(A) typical < 62 db(A) maximum

[9] Performance may be de-rated at operating temperatures above 40°C (104°F).

Compliance Information

Certifications	UL 1741, UL 9540, UL 9540A, UL 3741, UL 1741 PCS, UL 1741 SA, UL 1741 SB, UL 1973, UL 1699B, UL 1998, CSA C22.2 No. 0.8, CSA C22.2 No. 107.1, CSA C22.2 No. 330, CSA 22.3 No. 9, IEEE 1547, IEEE 1547A, IEEE 1547.1, CA Rule No.21
Grid Connection	United States and Canada
Emissions	FCC Part 15 Class B, ICES 003
Environmental	RoHS Directive 2011/65/EU
Seismic	AC156, IEEE 693-2005 (high)
Fire Testing	Meets the unit level performance criteria of UL 9540A

Powerwall 3 Technical Specifications

Mechanical Specifications

Dimensions	1105 x 609 x 193 mm (43.5 x 24 x 7.6 in) [10]
Total Weight of Installed Unit	132 kg (291.2 lb)
Weight of Powerwall 3	124 kg (272.5 lb)
Weight of Glass Front Cover	6.5 kg (14.5 lb)
Weight of Wall Bracket	1.9 kg (4.2 lb)
Mounting Options	Floor or wall mount

[10] These dimensions include the glass front cover being installed on Powerwall 3.

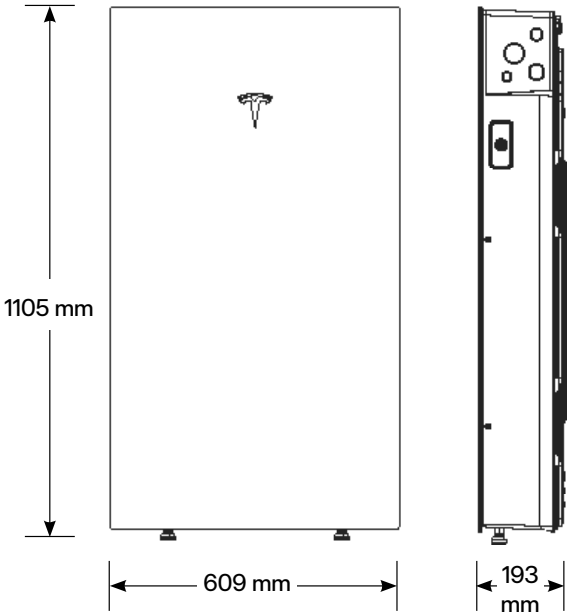

Powerwall 3 Expansion Technical Specifications

Battery Technical Specifications

Model Number	1807000-xx-y
Nominal Battery Energy	13.5 kWh
Voltage Range	52 - 92 V DC [11]

[11] Powerwall 3 Expansion units are connected in parallel and are not field serviceable.

Environmental Specifications

Operating Temperature	–20°C to 50°C (–4°F to 122°F) [12]
Operating Humidity (RH)	Up to 100%, condensing
Storage Temperature	–20°C to 30°C (–4°F to 86°F), up to 95% RH, non-condensing, State of Energy (SOE): 25% initial
Maximum Elevation	3000 m (9843 ft)
Environment	Indoor and outdoor rated
Enclosure Rating	NEMA 3R
Ingress Rating	IP67
Pollution Rating	PD3

[12] Performance may be de-rated at operating temperatures above 40°C (104°F).

Compliance Information

Certifications	UL 1973, UL 9540

Mechanical Specifications

Dimensions	1105 x 609 x 168 mm (43.5 x 24 x 6.6 in) [13]
Total Weight of Wall-Mounted Expansion Unit	118.5 kg (261.2 lb)
Weight of Expansion Unit	110 kg (242.5 lb)
Weight of Glass Front Cover	6.5 kg (14.5 lb)
Weight of Wall Bracket	1.9 kg (4.2 lb)
Weight of Expansion Accessories	0.7 kg (1.5 lb)
Mounting Options	Floor or wall mount
Stacking Capability (Floor Mount Only)	Up to (3) Expansion units behind a Powerwall 3
Compatibility with Other Systems	Only compatible with Powerwall 3
Connection to Powerwall 3 or Expansions	Powerwall 3 Expansion harness [14]

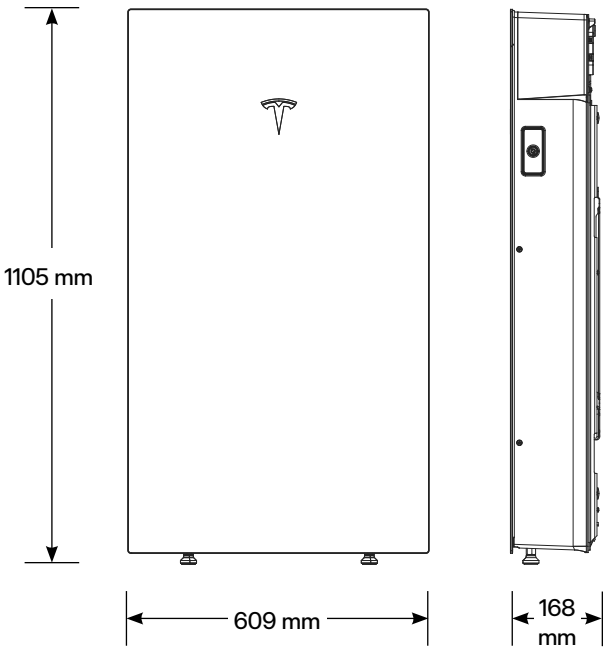

[13] These dimensions include the glass front cover being installed on Powerwall 3 Expansion.

[14] The Powerwall 3 Expansion harness is a listed component of the UL 9540 certification.

Solar Shutdown Device Technical Specifications

—

The Solar Shutdown Device is a Mid-Circuit Interrupter (MCI) and is integral to the rapid shutdown (RSD) function required for rooftop PV systems in accordance with Article 690 of the NEC. When paired with Powerwall 3, solar array shutdown is initiated by an External System Shutdown Switch or the On/Off Enable switch located on Powerwall 3. Systems not subject to rapid shutdown requirements must still install one or more MCIs for functional purposes; see the Powerwall 3 installation manual for details.

Electrical Specifications

Model	MCI-1	MCI-2	MCI-2 High Current
Nominal Input DC Current Rating (I_{MP})	13 A	13 A	15 A
Maximum Input Short Circuit Current (I_{SC})	19 A	17 A	19 A
Maximum System Voltage	600 V DC	1000 V DC [15]	1000 V DC [15]
Maximum Disconnect Voltage [16]	600 V DC	165 V DC	165 V DC

[15] Maximum System Voltage is limited by Powerwall to 600 V DC.

[16] Maximum Disconnect Voltage is the maximum voltage allowed across each MCI in the open position (Rapid Shutdown Initiated). An individual MCI-2 has a voltage rating of 165V but in combination (connected in the same string) their voltage ratings are additive.

RSD Module Performance

Maximum Number of Devices per String	5
Control	Power Line Excitation
Passive State	Normally Open
Maximum Power Consumption	7 W
Warranty	25 years

Environmental Specifications

Operating Temperature	-40°C to 50°C (-40°F to 122°F)	-45°C to 70°C (-49°F to 158°F)
Storage Temperature	–30°C to 70°C (–22°F to 158°F)	–30°C to 70°C (–22°F to 158°F)
Enclosure Rating	NEMA 4X / IP65	

Mechanical Specifications

Electrical Connections	MC4 Connector	
Housing	Plastic	
Dimensions	125 x 150 x 22 mm (5 x 6 x 1 in)	173 x 45 x 22 mm (6.8 x 1.8 x 1 in)
Weight	350 g (0.77 lb)	120 g (0.26 lb)
Mounting Options	ZEP Home Run Clip M4 Screw (#10) M8 Bolt (5/16") Nail / Wood screw	Wire Clip

Compliance Information

Certifications	UL 1741 PVRSE, UL 3741, PVRSA (Photovoltaic Rapid Shutdown Array)
RSD Initiation Method	External System Shutdown Switch or Powerwall 3 Enable Switch

UL 3741 PV Hazard Control (and PVRSA) Compatibility

See UL 3741 Application Addendum

Gateway 3

—

Tesla Gateway 3 controls connection to the grid in a Powerwall system, automatically detecting outages and providing seamless transition to backup power. It provides energy monitoring that is used by Powerwall for solar self-consumption, time-based control, and backup operation.

Performance Specifications

Model Number	1841000-x1-y
Nominal Grid Voltage	120/240 V AC
Grid Configuration	Split phase
Grid Frequency	60 Hz
Continuous Current Rating	200 A
Maximum Supply Short Circuit Current	22 kA with Square D or Eaton main breaker 25 kA with Eaton main breaker [17]
IEC Protective Class	Class I
Overvoltage Category	Category IV

[17] Only Eaton CSR or BWH main breakers are 25 kA rated.

AC Meter	+/- 0.5%
Communication	CAN
User Interface	Tesla App
Backup Transition	Automatic disconnect for seamless backup
Overcurrent Protection Device	100–200 A Service entrance rated Eaton CSR, BWH, or BW, or Square D QOM breakers
Internal Panelboard	200 A 8-space/16 circuit breakers Eaton BR, Siemens QP, or Square D HOM breakers rated to 10–125A
Warranty	10 years

Environmental Specifications

Operating Temperature	–20°C to 50°C (–4°F to 122°F)
Operating Humidity (RH)	Up to 100%, condensing
Maximum Elevation	3000 m (9843 ft)
Environment	Indoor and outdoor rated
Enclosure Type	NEMA 3R

Compliance Information

Certifications	UL 67, UL 869A, UL 916, UL 1741 PCS, CSA 22.2 107.1, CSA 22.2 29
Emissions	FCC Part 15, Class B, ICES 003

Mechanical Specifications

Dimensions	660 x 411 x 149 mm (26 x 16 x 6 in)
Weight	16.3 kg (36 lb)
Mounting options	Wall mount

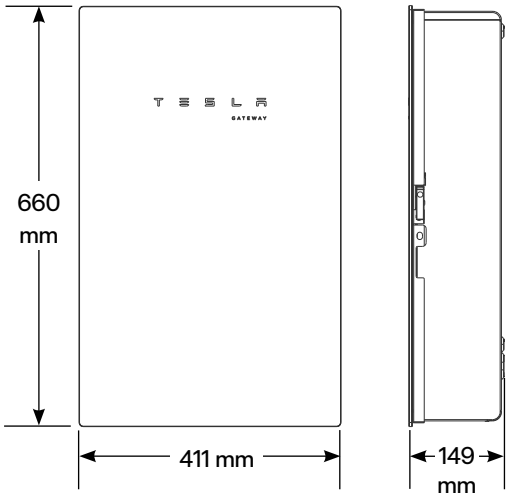

Backup Switch

—

The Tesla Backup Switch controls connection to the grid in a Powerwall system, and can be easily installed behind the utility meter or in a standalone meter panel downstream of the utility meter.
The Backup Switch automatically detects grid outages, providing a seamless transition to backup power. It communicates directly with Powerwall, allowing home energy usage monitoring from any mobile device with the Tesla app.

Performance Specifications

Model Number	1624171-xx-y
Continuous Load Rating	200 A, 120/240 V split phase
Maximum Supply Short Circuit Current	22 kA with breaker [18]
Communication	CAN
AC Meter	+/- 0.5%
Expected Service Life	21 years
Warranty	10 years

[18] Breaker maximum supply short circuit current rating must be equal to or greater than the available fault current.

Environmental Specifications

Operating Temperature	–40°C to 50°C (–40°F to 122°F)
Storage Temperature	–40°C to 85°C (–40°F to 185°F)
Enclosure Rating	NEMA 3R
Pollution Rating	PD3

Compliance Information

Safety Standards	USA: UL 414, UL 414 SB, UL 2735, UL 916, CA Prop 65
Emissions	FCC Part 15, Class B, ICES 003

Mechanical Specifications

Dimensions	176 x 205 x 74 mm (6.9 x 8.1 x 2.9 in)
Weight	2.8 lb
Meter and Socket Compatibility	ANSI Type 2S, ringless or ring type
External Service Interface	Contactor manual override [19] Reset button
Conduit Compatibility	1/2-inch NPT

[19] Manually overrides the contactor position during a service event.

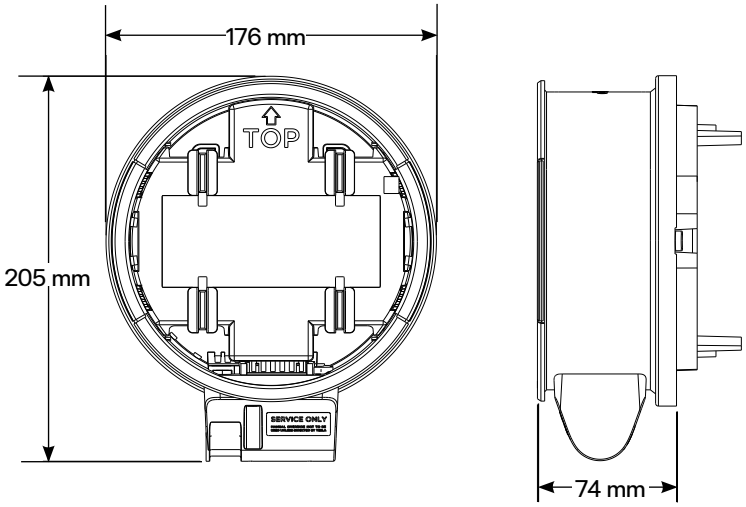

Backup Gateway 2

—

Backup Gateway 2 controls connection to the grid when paired with Powerwall 3, automatically detecting outages and providing seamless transition to backup power. Backup Gateway 2 also provides energy metering for solar self-consumption, time-based control, and backup operation.
In this system configuration, Powerwall 3 acts as the Site Controller, with the Backup Gateway 2 Site Controller disabled.

Performance Specifications

Model Number	1232100-xx-y
AC Voltage (Nominal)	120/240 V
Feed-in Type	Split phase
Grid Frequency	60 Hz
Current Rating	200 A
Maximum Supply Short Circuit Current	10 kA [20]
Overcurrent Protection Device	100 - 200 A, Service entrance rated
Overvoltage Category	Category IV

[20] When protected by Class J fuses, Backup Gateway 2 is suitable for use in circuits capable of delivering not more than 22kA symmetrical amperes.

Internal Primary AC Meter	+/- 0.2%
Internal Auxiliary AC Meter	+/- 2%
Backup Transition	Automatic disconnect for seamless backup
Modularity	Supports up to 10 AC-coupled Powerwalls
Optional Internal Panelboard	200 A 6-space / 12 circuit breakers Siemens QP or Square D HOM breakers rated 10 - 80A or Eaton BR breakers rated 10 - 125A
Warranty	10 years

Environmental Specifications

Operating Temperature	–20°C to 50°C (–4°F to 122°F)
Operating Humidity (RH)	Up to 100%, condensing
Maximum Elevation	3000 m (9843 ft)
Environment	Indoor and outdoor rated
Enclosure Type	NEMA 3R

Compliance Information

Certifications	UL 67, UL 869A, UL 916, UL 1741 PCS, CSA 22.2 0.19, CSA 22.2 205
Emissions	FCC Part 15, Class B, ICES 003

Mechanical Specifications

Dimensions	660 x 411 x 149 mm (26 x 16 x 6 in)
Weight	20.4 kg (45 lb)
Mounting options	Wall mount, Semi-flush mount

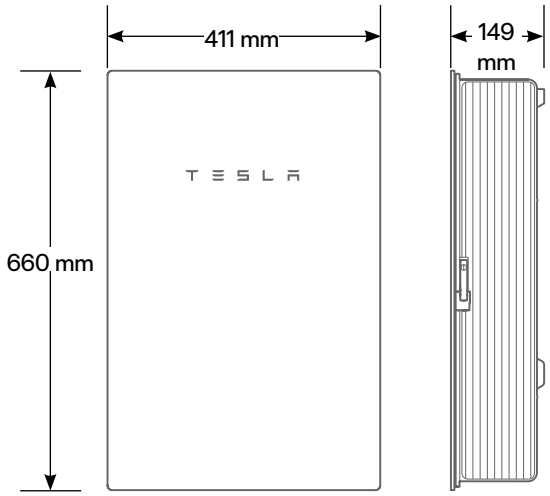

Powerwall 3 Example System Configurations

Powerwall 3 with Gateway 3

Whole Home Backup

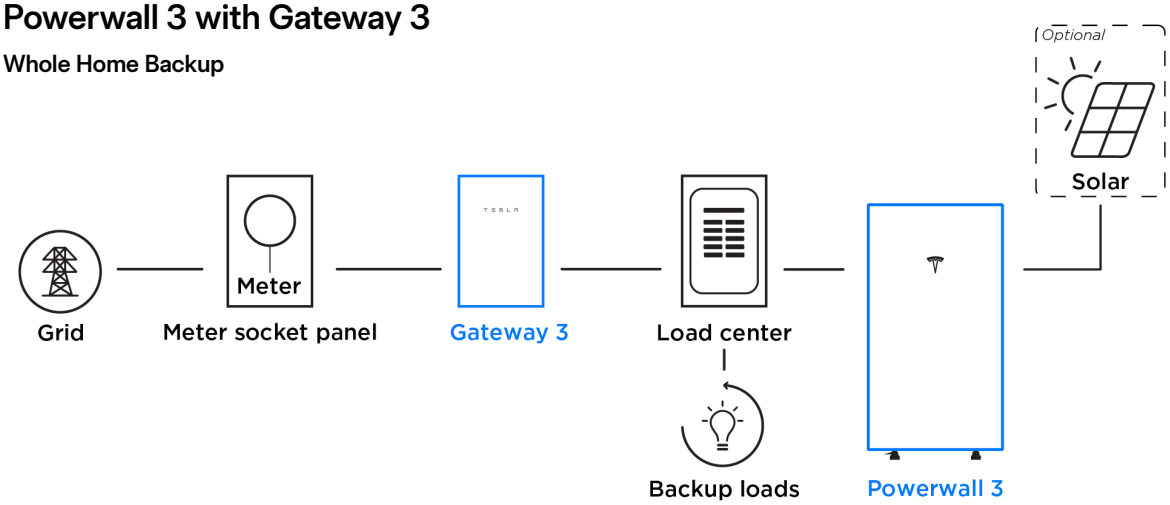

Powerwall 3 with Backup Switch

Whole Home Backup

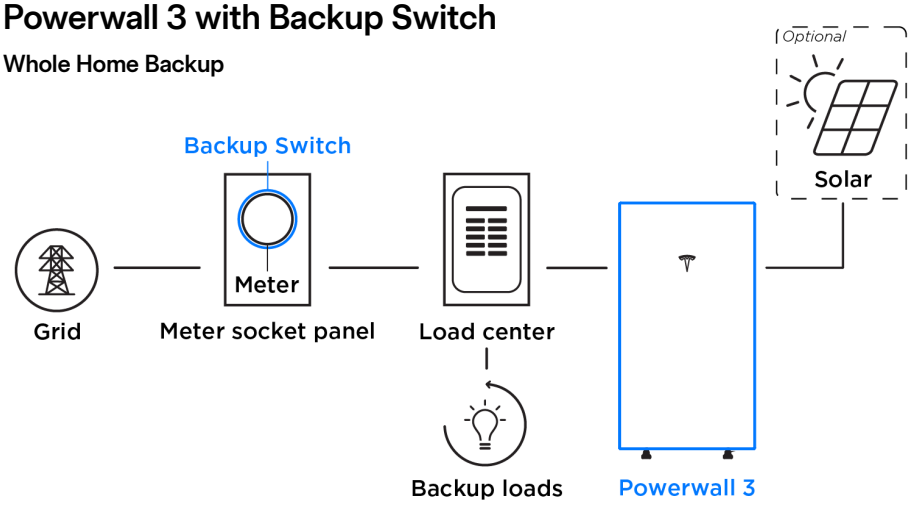

Powerwall 3 with Backup Gateway 2

Partial Home Backup

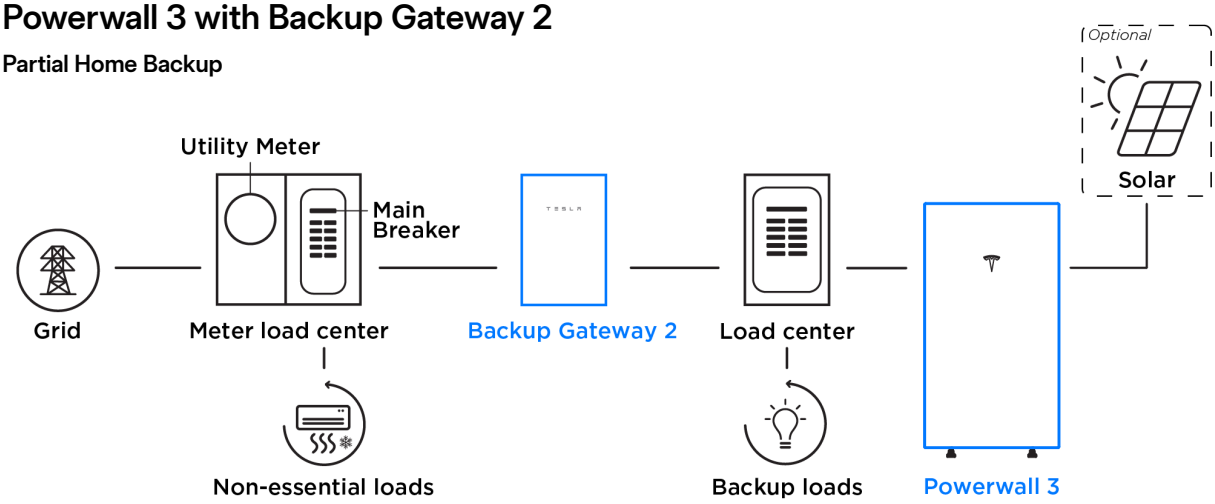

Powerwall 3 Example System Configurations

Powerwall 3 with Gateway 3

(1) Powerwall 3 with (3) Expansion Units

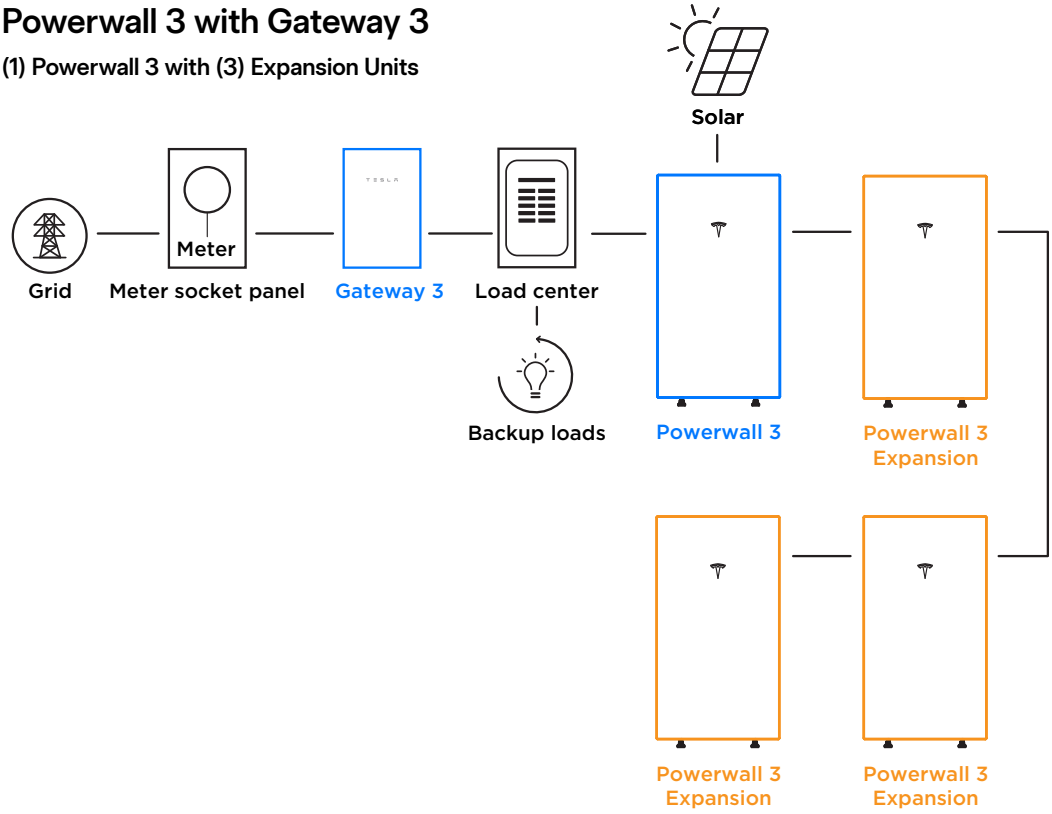

Powerwall 3 with Backup Switch
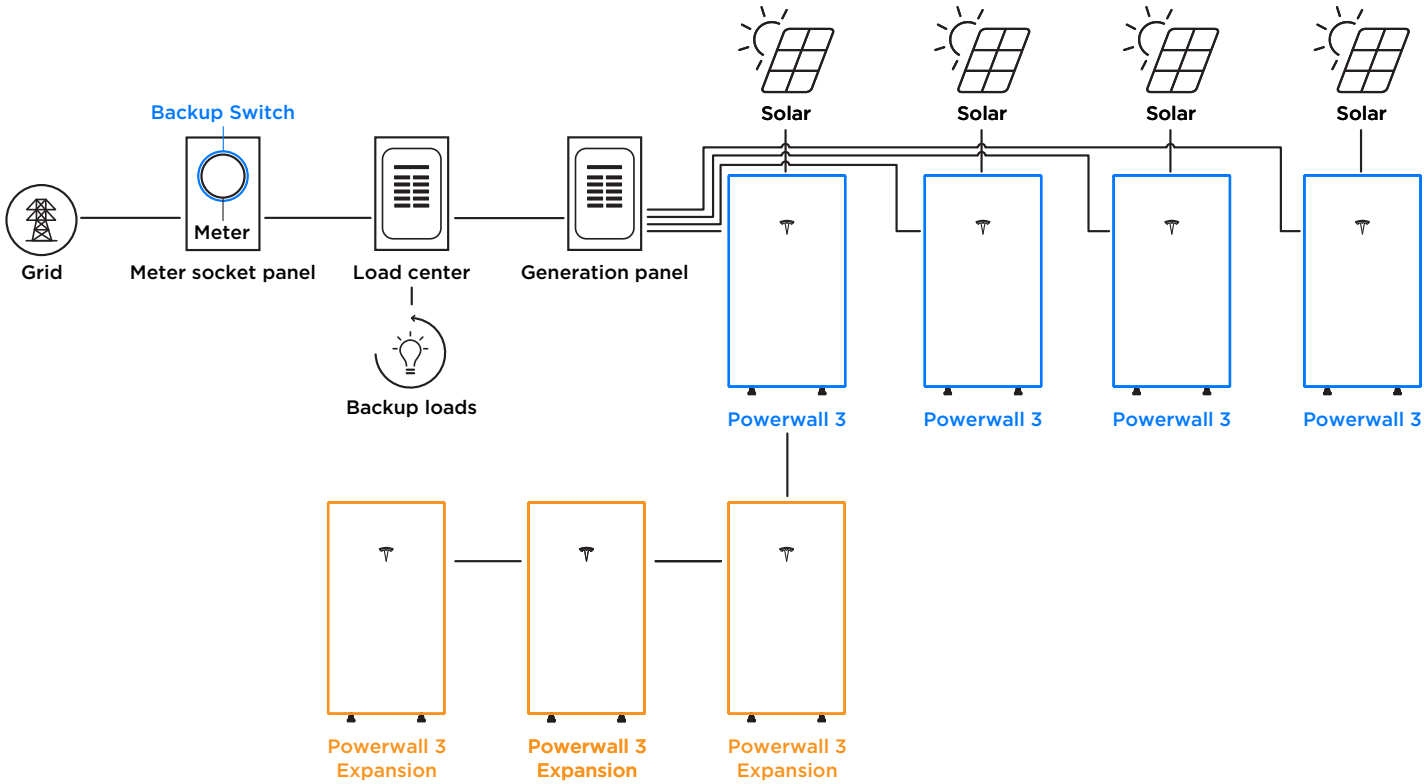
(4) Powerwall 3 Units with (3) Expansion Units (Maximum System Size)